Discussion 4A

1. Analyzing a Second-Order Circuit (Adapted from Hambley Example 4.5)

A DC source is connected to a series RLC circuit by a switch that closes at $t = 0$ as shown in Figure 1. The initial conditions are $i(0) = 0$ and $v_C(0) = 0$.

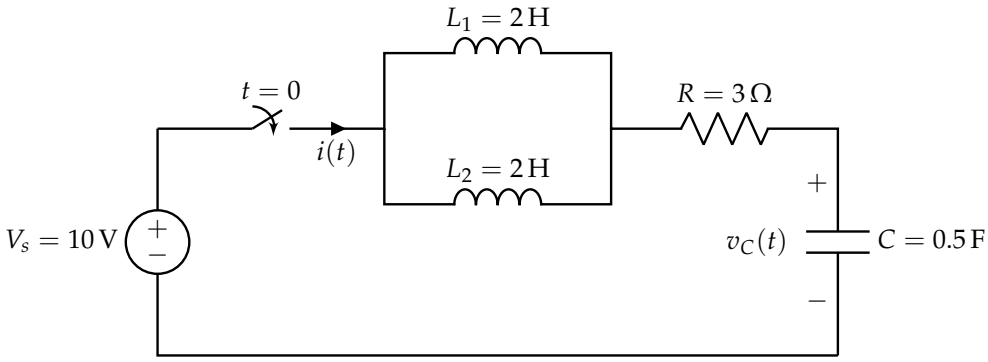

Figure 1: RLC Circuit

(a) **Find the equivalent inductance and redraw the circuit as a standard series RLC.**

(b) **Write the differential equation for $v_c(t)$.**

(c) **Redraw the circuit in steady state and find the steady state value for $v_C(t)$.**

(d) **Solve for $v_C(t)$ if $R = 3\,\Omega$.**

(e) **Plot the equation you calculated for $v_C(t)$.** It may be helpful to draw out each term in your general solution and then add them together.

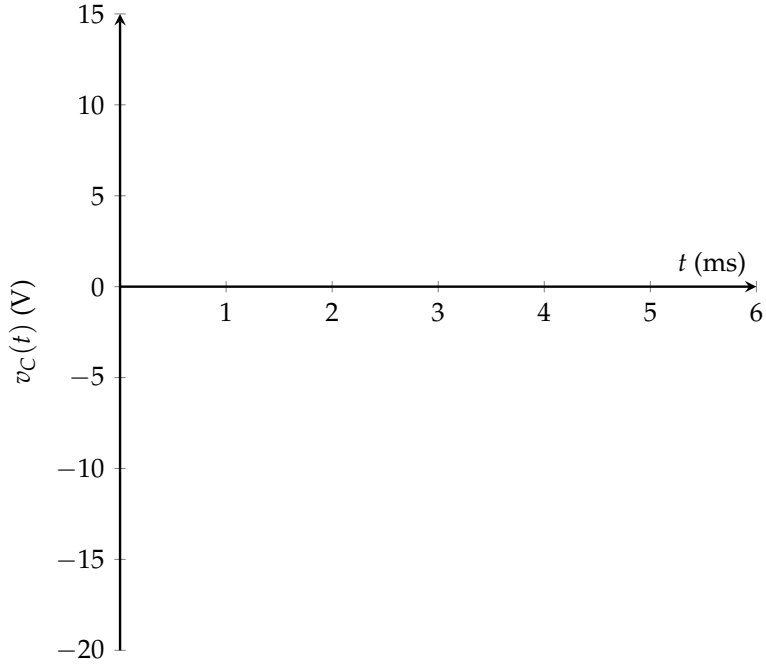

Contributors:

- Chancharik Mitra.
- Nikhil Jain.