Discussion 3A

1. RL Circuit Solution Methods

Consider the following circuit:

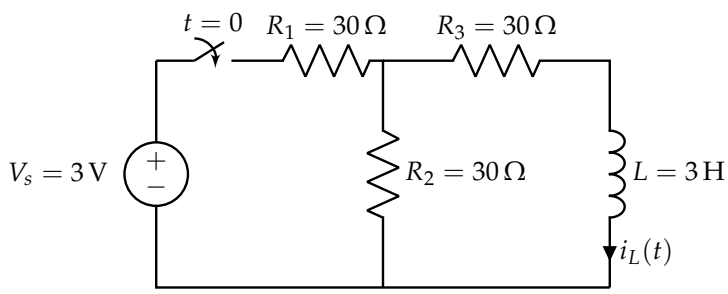

Figure 1

Before time $t = 0$, the circuit reaches a steady state. At time $t = 0$, the switch is closed. Our goal is to find the differential equation for the current through the inductor ($i_L(t)$). One method to approach this problem is to simply use Node Voltage Analysis (NVA). To start, we would define the node voltages in our circuit (including a ground node).

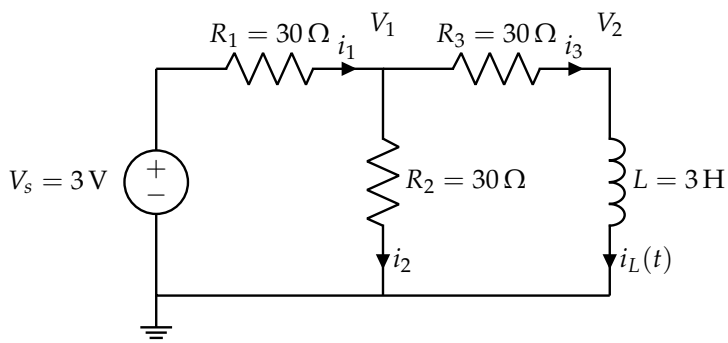

Figure 2

Then, we can set up a system of equations using KCL/KVL to find our desired differential equation. First, let's perform KCL on the node with defined voltage V_1.

$$
\begin{aligned}
i_1 &= i_2 + i_3 \\
\frac{V_s - V_1}{R_1} &= \frac{V_1 - 0}{R_2} + \frac{V_1 - V_2}{R_3} \\
\frac{3 - V_1}{30} &= \frac{V_1 - 0}{30} + \frac{V_1 - V_2}{30} \\
V_1 &= 1 + \frac{V_2}{3}
\end{aligned}
$$

Now, let's perform KCL on the node with the defined voltage V_2.

Note that $V_2 - 0 = V_2$ is the voltage across the inductor so by the inductor I-V relationship, $V_2 = L\frac{\mathrm{d}i_L}{\mathrm{d}t} = 3\frac{\mathrm{d}i_L}{\mathrm{d}t}$.

$$\begin{aligned}
i_3 &= i_L \\
\frac{V_1 - V_2}{R_3} &= i_L \\
\frac{V_1 - V_2}{30} &= i_L \\
\frac{V_1}{30} &= \frac{V_2}{30} + i_L \\
\frac{1}{30}\left(1 + \frac{V_2}{3}\right) &= \frac{V_2}{30} + i_L \\
\frac{1}{45}V_2 + i_L &= \frac{1}{30} \\
\frac{1}{45}\left(3\frac{\mathrm{d}i_L}{\mathrm{d}t}\right) + i_L &= \frac{1}{30} \\
\frac{\mathrm{d}i_L}{\mathrm{d}t} + 15i_L &= \frac{1}{2}
\end{aligned}$$

Thus, we have found the differential equation! However, this method required solving a system of equations; is there another way?

(a) Another way to approach the problem is to use equivalence. Simplify the voltage source and resistor network into a voltage source and resistor using Thevenin equivalence. Then, reconnect the inductor and **find the differential equation for** $i_L(t)$.

For reference, here is the circuit that we want to simplify using Thevenin equivalence:

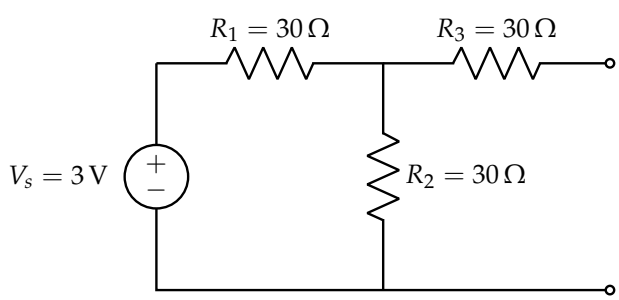

Figure 3

(HINT: Your final differential equation should be the same as the one from the problem introduction.)

Solution: There are many approaches for finding the Thevenin equivalent circuit. Let's find the voltage V_{TH} when the terminals are open and the equivalent resistance R_{TH} looking into the terminals.

To find the voltage V_{TH}, we can notice that no current flows through resistor R_3 due to the open circuit. Thus, the voltage at the terminals is the same as the voltage of the node in between all of the resistors, if we define the bottom node to be ground. Then, since the current through R_1 and R_2 must be the same by KCL, V_{TH} will just be the result of a voltage divider between those two resistors.

$$V_{TH} = \frac{R_2}{R_1 + R_2}V_s = \frac{30}{30 + 30}(3) = \frac{3}{2}$$

To find the equivalent resistance looking into the terminals, we zero out the independent voltage source (which becomes a short circuit) and find the equivalent resistance of the remaining resistors:

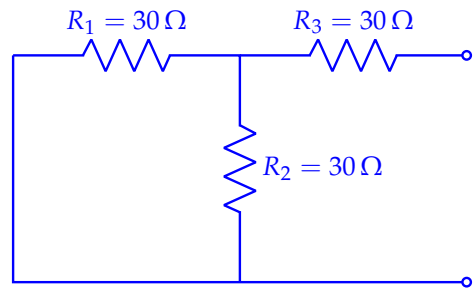

Figure 4

Using parallel/series resistance knowledge, we can find that

$$R_{TH} = R_1||R_2 + R_3 = 30||30 + 30 = 15 + 30 = 45$$

Thus, our Thevenin equivalent circuit is:

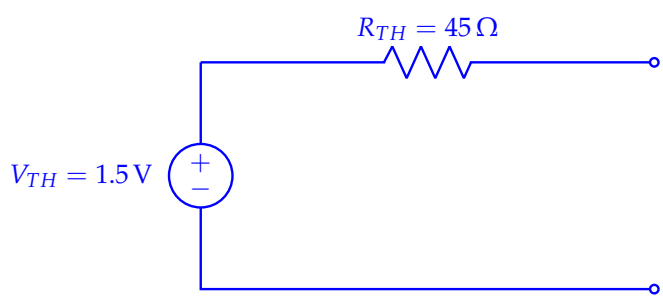

Figure 5

Now, let's add our inductor back into the circuit:

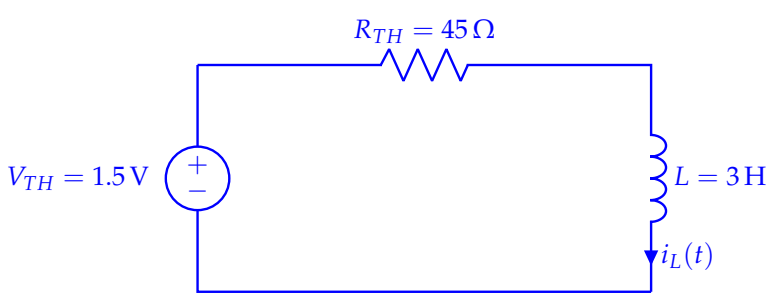

Figure 6

This is a much simpler circuit to analyze! Let's define the voltage across the inductor to be v_L and perform KCL to find the differential equation:

$$\frac{V_{TH} - v_L}{R_{TH}} = i_L$$

$$\begin{aligned}
\frac{1.5 - v_L}{45} &= i_L \\
\frac{v_L}{45} + i_L &= \frac{3}{2} \\
\frac{1}{45}\left(3\frac{\mathrm{d}i_L}{\mathrm{d}t}\right) + i_L &= \frac{1}{30} \\
\frac{1}{15}\frac{\mathrm{d}i_L}{\mathrm{d}t} + i_L &= \frac{1}{30} \\
\frac{\mathrm{d}i_L}{\mathrm{d}t} + 15i_L &= \frac{1}{2}
\end{aligned}$$

Notice that this is the same differential equation as obtained using Node Voltage Analysis (NVA)!

(b) Now, let's start solving the differential equation. First, **find the initial condition $i_L(0)$ for our system**. Remember that the current through the inductor cannot change instantaneously (since this would correspond to infinite voltage through the inductor I-V relationship) so $i_L(0)$ will be the same as the steady state value from $t < 0$.

(HINT: If there is no voltage/current sources connected to this system, can there be any nonzero currents / voltage differences in the system during steady-state?)

Solution: Since no voltage/current sources are connected for $t < 0$ when the switch is open, the current in steady state will be $i_L(0) = 0$.

(c) **(OPTIONAL)** Now that we have our differential equation and initial condition, we can now solve for the current $i_L(t)$ as a function of time. **Solve the system for $i_L(t)$.** If you can, try to solve this by inspection. Otherwise, solve using the homogeneous and particular solution method.

Solution:

Method 1: Inspection

We know that when the switch closes, the voltage source becomes connected to the system and after a long time, i_L will reach some steady state value. In steady state, an inductor behaves as a short circuit so if we replace the inductor with a short circuit, we can find the steady state current through it. In doing so, we can visualize the following circuit:

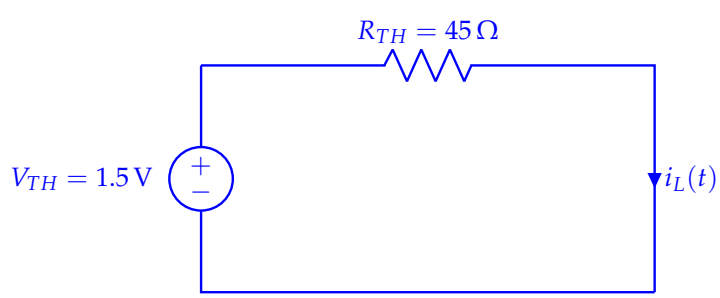

Figure 7

The current in this case would simply be $\lim_{t\to\infty} i_L(t) = \frac{V_{TH}}{R_{TH}} = \frac{1.5}{45} = \frac{1}{30}$.

From our differential equation, we can recognize that our time constant is $\tau = \frac{L}{R_{TH}} = \frac{1}{15}$. Additionally, we know that i_L goes from $i_L(0) = 0$ to $\lim_{t\to\infty} i_L(t) = \frac{1}{30}$ exponentially, so the term that describes this transistion is $1 - e^{-\frac{t}{\tau}} = 1 - e^{-15t}$.

Combining our ideas, we can determine that $i_L(t) = \frac{1}{30}(1 - e^{-15t})$.

Method 2: Homogeneous and Particular Solutions

Notice that our differential equation has an input term (not homogeneous). Thus, we will need to find both a homogeneous solution and particular solution.

Let $i_h(t)$ be a homogeneous solution to our equation. To find $i_h(t)$, set the input term in our differential equation to 0:

$$\frac{\mathrm{d}i_h}{\mathrm{d}t} + 15i_h = 0 \tag{1}$$

$$\frac{\mathrm{d}i_h}{\mathrm{d}t} = -15i_h \tag{2}$$

Notice that this differential equation is the same form as that of RC circuits! If we let $\lambda = -15$, our solution will be identical:

$$i_h(t) = A_1 \mathrm{e}^{\lambda t} = A_1 \mathrm{e}^{-15t}$$

We can also notice that the time constant in this case will be $\tau = \frac{L}{R_{TH}} = \frac{1}{15}$.

Now, let's find a particular solution. For this, we will use the concept of DC steady state (as $t \to \infty$). In DC steady state, an inductor behaves as a short circuit (please refer to the notes and lectures for explanations as to why), so the simplified circuit from out previous example will look as follows in DC steady state:

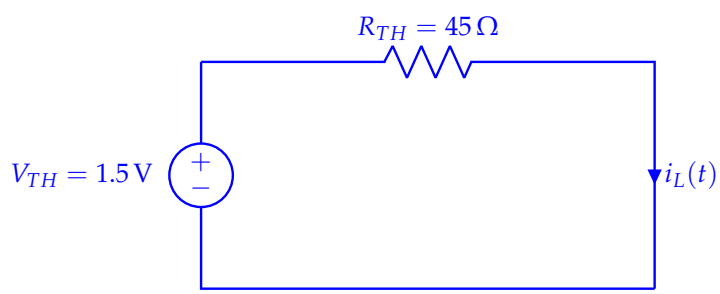

Figure 8

With use of Ohm's law, we can determine that the current through the inductor (represented by the short circuit in this DC steady state scenario) will be:

$$i_p(t) = \frac{1.5}{45} = \frac{1}{30} \tag{3}$$

Now, we can combine the two solutions to get our overall solution.

$$\begin{aligned} i_L(t) &= i_h(t) + i_p(t) \\ &= A_1 \mathrm{e}^{-15t} + \frac{1}{30} - \frac{1}{30}\mathrm{e}^{-15t} \\ &= \left(A_1 - \frac{1}{30}\right)\mathrm{e}^{-15t} + \frac{1}{30} \\ &= A\mathrm{e}^{-15t} + \frac{1}{30} \end{aligned}$$

We have defined $A = A_1 - \frac{1}{30}$, which is simply another version of the same arbitrary constant that accounts for the initial condition of our differential equation that we found in the previous part of the problem.

Now, we use our initial condition to solve for A.

$$\begin{aligned} i_L(0) = Ae^{-15(0)} + \frac{1}{30} &= 0 \\ A &= -\frac{1}{30} \end{aligned}$$

Thus, our final solution is

$$i_L(t) = -\frac{1}{30}e^{-15t} + \frac{1}{30} = \frac{1}{30}\left(1 - e^{-15t}\right)$$

2. Transistor Behavior

Unlocked by Lectures 1 and 2

For all NMOS devices in this problem, $V_{tn} = 0.5\,\text{V}$. For all PMOS devices in this problem, $|V_{tp}| = 0.6\,\text{V}$. **Note: For this problem, we are also using the resistor-switch model for a transistor.**

(a) Which is the equivalent circuit as seen from the voltage source on the right-hand side of the circuit? **Fill in the correct bubble.**

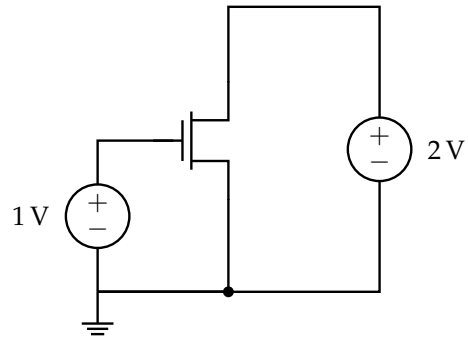

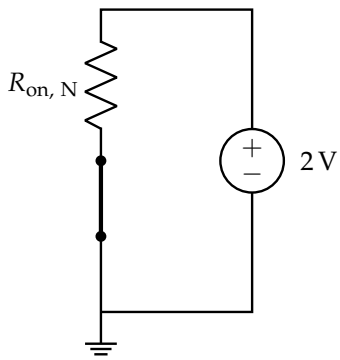

Circuit A

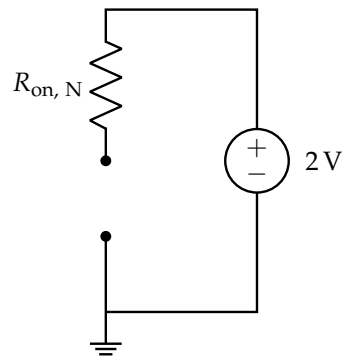

Circuit B

	A	B
Equivalent Circuit	◯	◯

Solution: For the NMOS, $V_{GS} = 1\,\text{V} > V_{tn} = 0.5\,\text{V}$, so the NMOS transistor is on. Thus circuit A is equivalent.

(b) Which is the equivalent circuit as seen from the voltage source on the right-hand side of the circuit? **Fill in the correct bubble.**

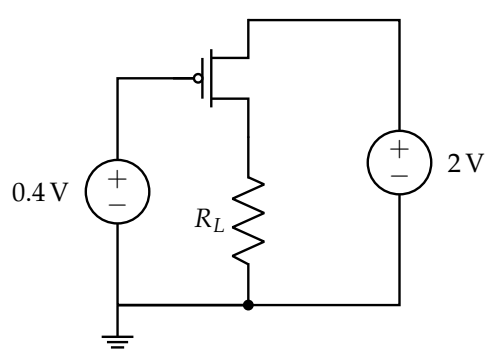

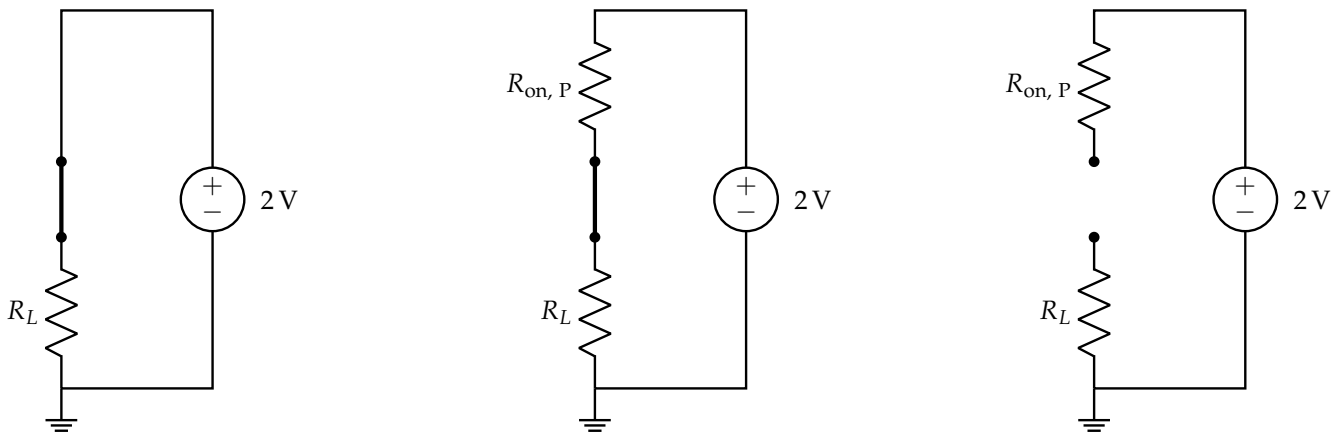

Circuit A Circuit B Circuit C

	A	B	C
Equivalent Circuit	○	○	○

Solution: For the PMOS transistor, $|V_{GS}| = 1.6\,\text{V} > |V_{tp}| = 0.6\,\text{V}$, so the PMOS transistor is on. Thus circuit B is equivalent.

(c) Which is the equivalent circuit as seen from the voltage source on the right-hand side of the circuit? **Fill in the correct bubble.**

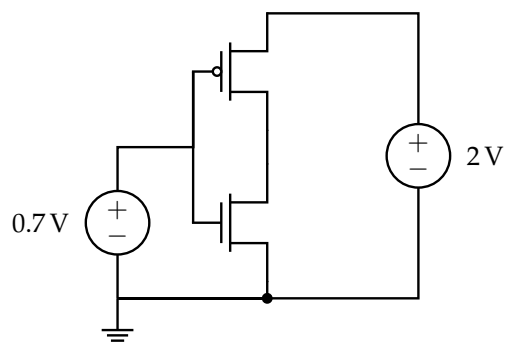

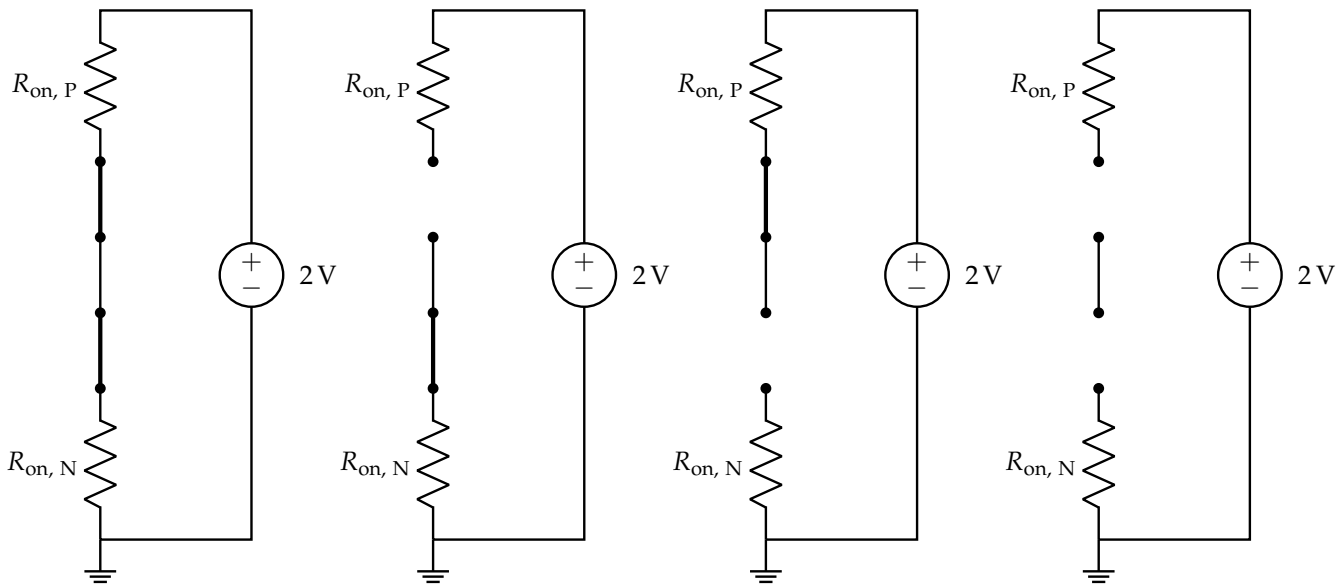

	A	B	C	D
Equivalent Circuit	○	○	○	○

Solution: For the PMOS transistor, $|V_{GS}| = 1.3\,\text{V} > |V_{tp}| = 0.6\,\text{V}$, so the PMOS transistor is on. For the NMOS transistor, $V_{GS} = 0.7\,\text{V} > V_{tn} = 0.5\,\text{V}$, so the NMOS transistor is on.

Note that in this case, both transistors are on.

Thus circuit A is equivalent.

Aside: In digital logic, it is usually undesirable to have this state in your system for several reasons. First, the output voltage of the inverter (the voltage at the shared drain of the NMOS and PMOS) will not be either 0 or V_{DD}, which means the output voltage is not at 'true' binary value. In addition, we now have a direct current path through the NMOS and PMOS transistors from VDD to ground. This will burn a lot of power! In reality, all inverters briefly transition through this state where both NMOS and PMOS are on when the inputs change from 1 to 0 or 0 to 1.

Contributors:

- Nikhil Jain.
- Sidney Buchbinder.
- Anant Sahai.
- Chancharik Mitra.